Glossary C

Return to main Glossary index

C/MRI

Bruce Chubb's Computer/Model Railroad Interface system C/MRI. A series of modules and support available for the system obtained from JLC Enterprises Inc. For website see links page

Cab Control

A system of control using DC power where more than one controller or cab is used to drive trains across the tracks controlled by another controller. This requires switches to transfer the supply from the cabs to the parts of the layout they will control, the switches preventing two or more cabs controlling simultaneously the same section of track.

Cabling

Cabling, or wiring, is the process of interconnecting devices, modules or areas together using wires usually over some distance. You could, for example, run some cabling between a switch board and some track switches elsewhere on a layout. MERG members can refer to MERG TB, LC01_2.pdf, covering layout cabling.

CAN or CAN bus

Refers to Controller Area Network, and is a bus standard designed to allow microcontrollers and devices to communicate with each other. It is a message-based protocol, designed specifically for automotive applications but now also used in other areas including model railroading. See: CAN_bus

CAN related projects from MERG

Some of the acronyms may be found with the suffix 'C'.
CANCMD The MERG DCC Command station, in the DCC section of the Kit Locker.
CANCAB The MERG DCC Handset, in the DCC section of the Kit Locker.
CANACC4 MERG CBUS Solenoid point motor driver, 1st generation CBUS Kit.
CANACC5 MERG CBUS Driver for motorised point actuators, 1st generation CBUS Kit.
CANACC8 MERG CBUS 8 Output steady state driver, 1st generation CBUS Kit.
CANACE3 MERG CBUS Control panel switch input module, 1st generation Kit.

CANACE8 MERG CBUS 8 input module, 1st generation Kit.
CANLED MERG CBUS Control panel LED driver, 1st generation Kit.
CANPAN MERG CBUS Control panel combined switch input and LED driver, 2nd generation Kit.

Public Wiki area for more details: Public CBUS

Capacitor

A capacitor is a basic electronic component and can have many uses. Small value capacitors are often used in an electrical signal path to block DC voltage and only let AC signals/voltages through. Small value capacitors may also be used with other components to make up filter circuits to pass or limit certain frequencies along a wire. Large value capacitors are often used for short term electrical storage or to smooth out AC ripple in power supplies that get their power from an AC input. Combining several large capacitors, or using one or more “super” capacitors, may be used in a model railroad engine to provide momentary power when crossing parts of a track (dirty track or gaps in track for example) which would normally cause the engine to stutter or stop.

The common term “bypass capacitor” refers to adding a small value capacitor directly across the power and ground pins of an IC in order to help remove AC ripple or noise from the DC voltage used by the IC.

Capacitors can be made from may types of materials or processes such as mica, tantalum, polystyrene, electrolytic or ceramic. Each type has its uses and one type generally will not work in place of other types. Usually the type is called out on a parts list or schematic, or based on the value and tolerance, it may be assumed to be a certain type. Capacitor values are measured in “Farads”, generally microfarads (µF), nanofarads (nF) or picofarads (pF).
Main article

CARLOS

CARLOS is an acronym for Computer Aided Railway Layout Operating System, a computer programme for creation of model railway control panels on screen. CARLOS is a DOS program developed by founding MERG member, the late John Down, it was designed to be used with the Remote Panel Control (RPC) system. See TB G18/1 for more information.

An adaptation of the program may be seen at the occasional model railway exhibition running the Hysteresis loop demonstration. Until recently running on a Windows 95 laptop, it now runs on a Raspberry Pi with a CEEEDTOP screen.

CBUS

CBUS refers to the CAN based layout control bus created by Mike Bolton and Gil Fuchs and used by MERG, see CBUS resources page

CDC

Communications Device Class
A class (type) of USB device. If A USB device identifies itself as a CDC it is telling the host that it is (or emulates) a USB-to-serial communications port converter. Modern operating systems like Windows 10 or Linux use this to know it should create a Virtual Comm Port VCP. Modern operating systems generally use this to determine that it should automatically load a USB driver to simulate a Windows COM or Linux TTY port.

CDU

Its short for capacitor discharge unit (CDU). Its use is generally to store a high voltage charge which is released very quickly to kick start solenoid operated point motors.

CE Mark

The CE mark (officially CE marking) is a mandatory marking on certain products, which is required if they are placed on the market in the European Economic Area (EEA). By affixing the CE marking, the manufacturer, or its representative, or the importer assures that the item meets all the essential requirements of all applicable EU directives. Examples of European Directives requiring CE marking: Toys-, Machinery-, Low Voltage equipment-, R&TTE-, EMC-Directive. There are about 25 Directives requiring CE marking.

Ceramic

Ceramic is a term for materials formed by heating an inorganic non-metallic substance. Ceramic is a material commonly used for electrical components. It is generally used either as an insulating material for voltages/currents, or as a component in making capacitors. Most of the references to ceramic on this site relate to ceramic capacitors, which are generally lower value capacitors. Ceramic is also a material, like plastic, that may be used to make the housing for an IC. When buying an IC, you may have an option for ceramic or plastic. The functionality should be the same but the cost is usually different. Another place ceramic is used is to generate a clock signal for a microprocessor by using a ceramic resonator component instead of a more common quartz crystal component.

Channel

A channel is a specific path, like a canal or river of communication. When a microprocessor communicates with several devices, it can be said that the communications take place on a series of separate channels. The term channels may describe how many independent devices can be controlled by a product. An example would be a “four channel servo control board” that may have one input but controls four servos over four different channels, perhaps using four identical circuits.

Charlieplexing

This is a method of multiplexing a few I/O pins of a microcontroller to control a large number of LEDs. It uses I/O pins that can be 3 state, either source or sink current or be open circuit (switched as input). LEDs are wired in reversed pairs. The LEDs are driven in a multiplexed way, rapidly by software. Only 1 LED is lit at any given time. 3 pins can drive 6 LEDs, 4 pins drive 12 LEDs, 5 pins drive 20 LEDs...

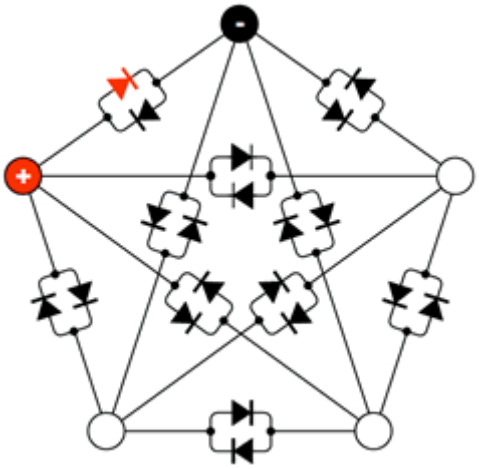

See the MERG Journal March 2006 p34 for additional information.

Circuit

An electrical circuit is a network (wiring scheme) that has a closed loop, providing current to the network and giving a return path for the current back to the starting point. Usually there are electrical components connected in series or parallel with the network wiring. An important characteristic of a network is that the amount of current being providing at the start of the network will exactly equal the amount of current returning to the start of the network, regardless of how the current passed though the network or the number of components in the network.

Clearing Point

This railroad related term describes a location in advance of a signal box up to which the track must be cleared to allow a signalman to accept a train into a block section. This assures that only one train can occupy a block section at a time.
See the MERG newsletter (now called a Journal) of March 2006 pages 23 on the web site.

Clock

In electronics and especially synchronous digital circuits, a clock signal is a signal used to coordinate the actions of two or more circuits. A clock signal oscillates between a high and a low state, normally with a 50% duty cycle, and is usually a square wave. Circuits using the clock signal for synchronization may become active at either the rising or falling edge, or both.
A crystal oscillator is often used in electronic circuits (sometimes abbreviated to XTAL on schematic diagrams) This uses the mechanical resonance of a vibrating crystal of piezoelectric material to create an electrical signal with a very precise frequency. This frequency is commonly used to keep track of

time (as in quartz wristwatches), to provide a stable clock signal for digital integrated circuits, and to stabilize frequencies for radio transmitters.
Using an amplifier and feedback, it is an especially accurate form of an electronic oscillator. The crystal used therein is sometimes called a “timing crystal”.

Closed Loop

In electronics, a closed loop system often refers to having a control device that has a feedback path back to the control device, which provides a measurement of what is actually taking place. The control device can then adjust its output accurately and predictably. A simple example of open loop vs. closed loop would be with a room with a light dimmer. An open loop scenario would be when you have your eyes closed. As you adjust the brightness, you cannot be sure how bright the room is. A closed loop scenario is when you have your eyes open. As you adjust the brightness, your eyes will show (feedback to you) how bright the room is. Closed loop processes can be seen in model railroading in the way a DCC decoder measures the back-EMF (a form of electromagnetic feedback) from the motor it controls. By using the back-EMF feedback signal the decoder can maintain a constant speed going up or down a grade. Many model railroad circuits can use a closed loop system for determining, for example, if points are really closed, a track switch is really set for the right direction or what the real position of a servo is.

CMOS

CMOS (“see-moss”), which stands for complementary metal-oxide semiconductor, is a major class of integrated circuits. CMOS chips include microprocessor, microcontroller, static RAM, and other digital logic circuits. The central characteristic of the technology is that it only uses significant power when its transistors are switching between on and off states. Consequently, CMOS devices use little power and do not produce as much heat as other forms of IC logic. Another important characteristic is that CMOS devices often have a wider operating voltage range than non-CMOS logic devices. This can make it easier to power a device from batteries or easier to design into a circuit mixed with traditional analog/linear devices like transistors and op-amps. You can often recognize a CMOS IC from its part number. A typical legacy logic chip would have a part number like 7404. The same function chip in CMOS would have a number like 74C04 or 74HC04.

Coil

In electrical engineering, an electromagnetic coil is formed when a metallic or conductive wire is looped around a core to create an electronic inductor or electromagnet. One loop of wire is usually referred to as one turn. A coil consists of one or more turns. Coils are often coated with varnish and/or wrapped with insulating tape to provide additional insulation and secure them in place. In relation to the MERG site, you will mostly see the terms coil or inductor used. Coil is mostly used related to electromechanical devices (like a solenoid, switch machine windings or magnetic pickup coils) used on a layout. The term inductor is mostly used to describe a type of coil used in an electrical circuit like a power supply or an oscillator. Many people use the terms interchangeably. The coil or inductor unit of measure uses the term “Henry”. The typical terms are millihenrys (mH) or microhenrys(µF), but very large filtering coils for power supplies will often have values that can range up to one or more

henries (H).

Colour Light

Refers in model railways to model signals with individual coloured LEDs or incandescent lights for red, yellow, and green.

COM Port

COM port is short for communications port. Related to PCs, “COM ports” are serial communication interfaces historically used to connect to terminals, MODEMs or printers. They followed the RS-232 or V.24 standards for function, pin out, speed and voltage levels. Over the years these traditional serial interfaces have become less common on PC hardware and have been replaced with “virtual communications ports” or VCPs utilizing the USB interface. To the PC operating system they appear to be the old hardware serial interfaces but often use a USB driver to convert and communicate the serial information over a USB cable. The USB cable may be hooked to a remote device which is designed for USB operation. Alternately the USB cable may have a converter built in which turns the USB serial data back into a 9-pin or 25-pin V.24 type interface. In all these cases the PC the serial interface is referred to as a COM port regardless of how the serial communication physically/electrically gets out of the PC. In the case you might be a Linux user, COM ports are known as TTY ports and perform generally the same function.

Command station

The Command Station handles the control of a DCC based system. All commands are processed by the Command Station. After receipt of requests from one or several cabs (throttles), the command station’s internal computer translates these cab requests into decoder commands in the form of digital packets. These are sent through the track to decoders fitted in locomotives or accessory decoders which control points and signals.

Common

A wire or connector that is Common or connected to many or all of the components of a circuit. It is often meant to refer to a common ground/earth connection used by multiple components. It may also refer to a common signal, like a system clock used by multiple electrical components, or a common power connection.

Common Return Wiring

One way of wiring a model railway with fewer wires. It can be thought of like automobile wiring. In automobiles, the metal chassis is the common ground connection, returning all circuits back to a battery connection. In this case dozens of individual ground return wires from all over the automobile

are not needed. In the case of a model railway, generally a heavy gauge wire can be run around the layout that most or all circuits can use as a common return path (usually ground/earth) for signals or power to an originating point.

Figure 3

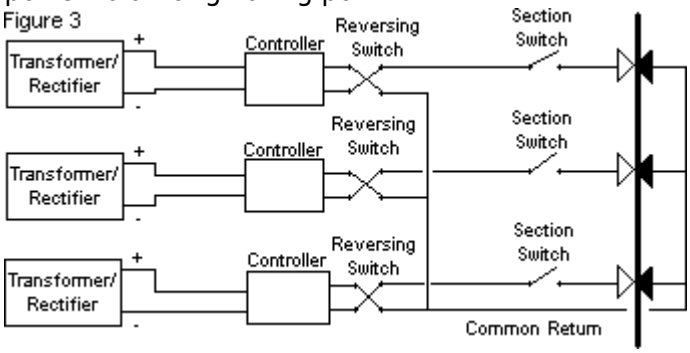

Computer Control Software

Software designed specifically to control the activities of a model railway. Can provide a visual indication on the computer screen of every aspect of the control system. There are commercial software systems available as well as software developed by MERG members.

Conductor

Conductors are materials that allow electrical current to flow through them. They are the opposite of insulators. Also see semi-conductor.

Consist

Consist is a term used in DCC to refer to the linking of two or more locomotives (decoders) so they respond to a single Address. In the UK this may be more familiarly known as Double Heading.

Control Systems

A Control System as applied to model railways can be any system that controls the activities of the railway.

CPC

The Circuit Protective Conductor (CPC) is a vital component in electrical systems, designed to connect exposed conductive parts to the main earthing terminal, ensuring safety by preventing electric shock.

Crystal

A crystal in the context of this web site refers to an electronic component made from a quartz crystal that oscillates at a specific frequency to provide a timing signal to an oscillator circuit or microprocessor.

Current

Electric current is by definition the flow of electric charge (electron flow) through a wire, device or circuit. The standard unit of electric current is the Ampere (A), which is a measurement of a certain amount of electrons passing a given point in one second. See also Amps or Ampere

Current Shunt

In electronics current shunt can be a device used to measure current, or a method to allow some current to bypass a device or circuit. In the first case a current shunt would typically be a very low ohm resistance inserted into a circuit such that the voltage drop across the shunt is related to the amount of current passing through the shunt (can be determined using an Ohms law formula). An example would be that if a one ohm resistance shunt is inserted in the circuit path and two volts was measured across the shunt, it would mean two amps are flowing through the shunt/circuit. In the second case a designer may insert a resistance or active component, like a transistor, across a device such as a voltage regulator to allow more current to pass from one side of the voltage regulator to the other. This might be done if the voltage regulator cannot, on its own, provide enough current to power the attached circuit.

CV

A Configuration Variable (CV) is a setting in a DCC decoder that can be customized by the user. Many CV's are defined by the NMRA, such as CV1 for address of a locomotive, but individual vendors may add or change some based on the features provided by the DCC decoder. Significant modifications can be made to the performance of a locomotive by changing the CV's.

From:
https://merg.org.uk/merg_wiki/ - **Knowledgebase**

Permanent link:
https://merg.org.uk/merg_wiki/doku.php?id=glossary:glossary_c

Last update: **2026/01/21 12:14**