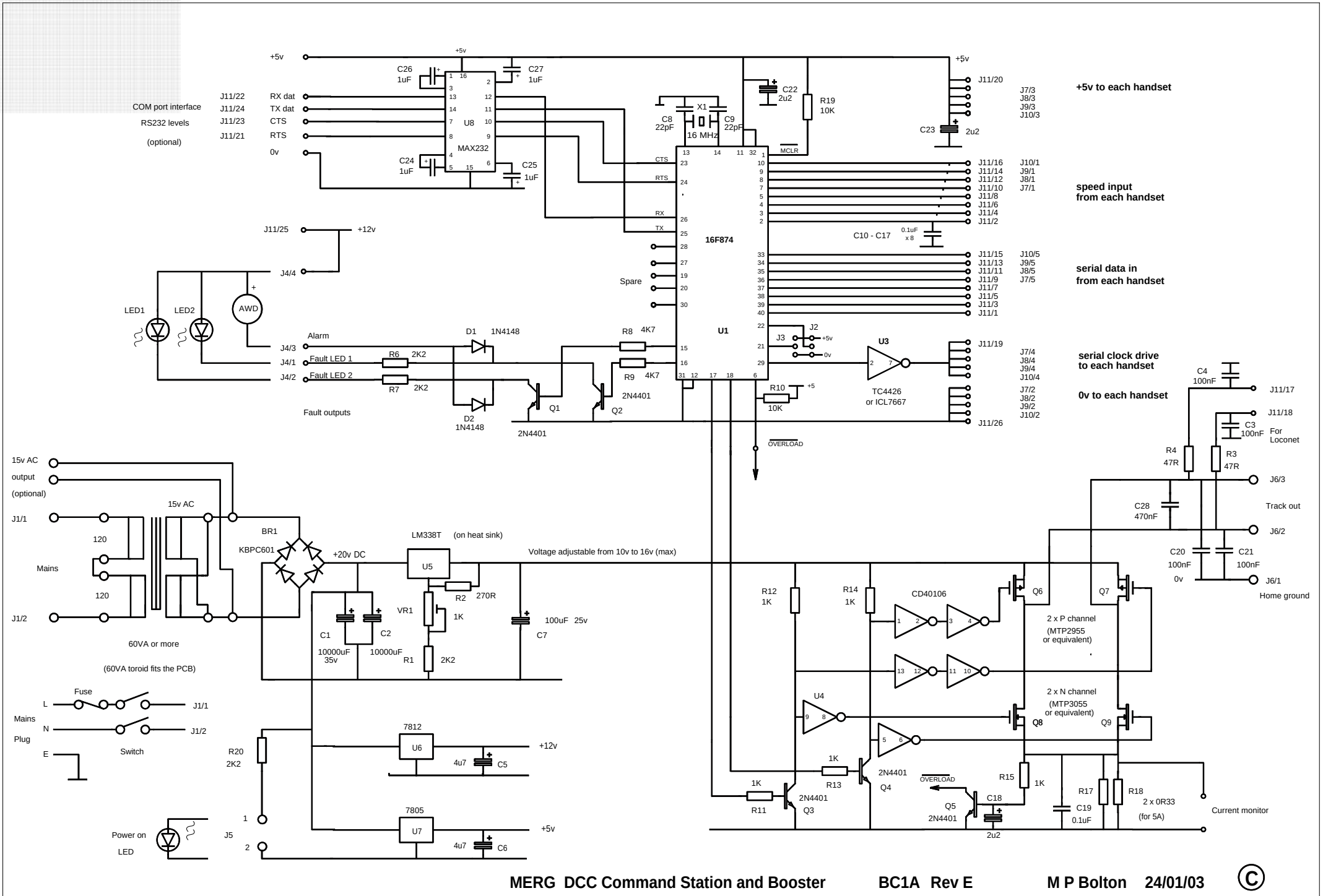
COM port interface
RS232 levels
(optional)
+5v
J11/22 RX dat
J11/24 TX dat
J11/23 CTS
J11/21 RTS
0v
C26 1uF
C27 1uF
U8
MAX232
C24 1uF
C25 1uF
C22 2u2
R19 10K
X1
C8 22pF
C9 22pF
16 MHz
MCLR
16F874
U1
CTS
RTS
RX
TX
Spare
C23 2u2
J11/20
J7/3 J8/3 J9/3 J10/3
+5v to each handset
J11/16 J11/14 J11/12 J11/10 J11/8 J11/6 J11/4 J11/2
J10/1 J9/1 J8/1 J7/1
speed input
from each handset
C10 - C17
0.1uF x 8
J11/15 J11/13 J11/11 J11/9 J11/7 J11/5 J11/3 J11/1
J10/5 J9/5 J8/5 J7/5
serial data in
from each handset
J11/25
+12v
J4/4
LED1
LED2
AWD
Alarm
J4/3
J4/1 Fault LED 1
J4/2 Fault LED 2
R6 2K2
R7 2K2
D1 1N4148
D2 1N4148
Fault outputs
R8 4K7
R9 4K7
Q1
Q2
2N4401
J2
J3
+5v
0v
U3
TC4426
or ICL7667
J11/19
J7/4 J8/4 J9/4 J10/4
serial clock drive
to each handset
R10 10K
+5
J7/2 J8/2 J9/2 J10/2
0v to each handset
J11/26
OVERLOAD
C4 100nF
J11/17
J11/18
C3 100nF
For Loconet
R4 47R
R3 47R
J6/3
Track out
C28 470nF
J6/2
C20 100nF
C21 100nF
0v
J6/1
Home ground
15v AC output (optional)
J1/1
J1/2
Mains
120
120
15v AC
60VA or more
(60VA toroid fits the PCB)
BR1
KBPC601
+20v DC
LM338T (on heat sink)
U5
Voltage adjustable from 10v to 16v (max)
R2 270R
VR1 1K
R1 2K2
C1 10000uF 35v
C2 10000uF
C7 100uF 25v
R12 1K
R14 1K
CD40106
Q6
Q7
2 x P channel
(MTP2955
or equivalent)
U4
2 x N channel
(MTP3055
or equivalent)
Q8
Q9
2N4401
Q4
R13 1K
R11 1K
2N4401
Q3
OVERLOAD
Q5
2N4401
C18 2u2
R15 1K
R17
R18
2 x 0R33
(for 5A)
C19 0.1uF
Current monitor
Fuse
L
N
E
Mains Plug
J1/1
J1/2
Switch
R20 2K2
7812
U6
+12v
4u7 C5
7805
U7
+5v
4u7 C6
J5
1
2
Power on LED
MERG DCC Command Station and Booster
BC1A Rev E
M P Bolton 24/01/03
©